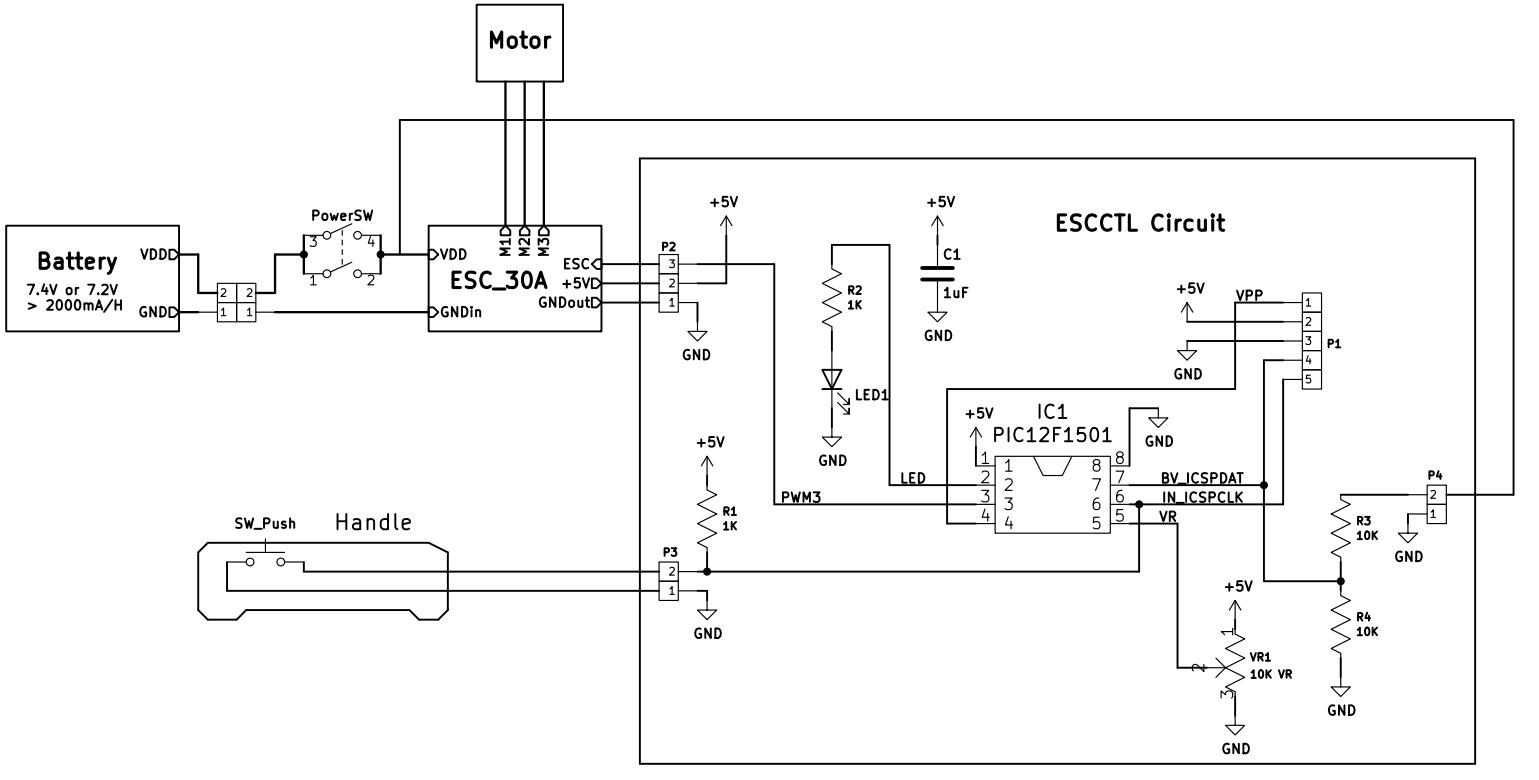
Motor
Battery
7.4V or 7.2V
> 2000mA/H
VDD
GND
PowerSW
ESC_30A
VDD
GNDin
M1D
M2D
M3D
ESC
+5V
GNDout
P2
+5V
GND
ESCCTL Circuit
R2
1K
LED1
GND
+5V
C1
1uF
GND
+5V
VPP
GND
P1
IC1
PIC12F1501
+5V
GND
LED
PWM3
BV_ICSPDAT
IN_ICSPCLK
VR
+5V
R1
1K
P3
GND
SW_Push
Handle
P4
GND
R3
10K
R4
10K
GND
+5V
VR1
10K VR
GND